UNIT	COOLING TOWER			DWG. #	TV03061P-DRD-ST	REV.	-
MODEL #	LPT-316	SCALE	NTS	SERIAL #		DATE	5/6/2024

EVAPCO, INC.

NOTES:
1. (M)- FAN MOTOR LOCATION
2. MPT DENOTES MALE PIPE THREAD
   FPT DENOTES FEMALE PIPE THREAD
   BFW DENOTES BEVELED FOR WELDING
   GVD DENOTES GROOVED
   FLG DENOTES FLANGE
3. + UNIT WEIGHT DOES NOT INCLUDE ACCESSORIES (SEE SEPARATE DRAWINGS FOR ACCESSORIES)
4. 3/4" DIA. MOUNTING HOLES. REFER TO RECOMMENDED STEEL SUPPORT DRAWING
5. MAKE-UP WATER PRESSURE-20 psi MIN, 50 psi MAX
6. DIMENSIONS LISTED AS FOLLOWS:
   ENGLISH FT-IN
   [METRIC] MM

Preliminary

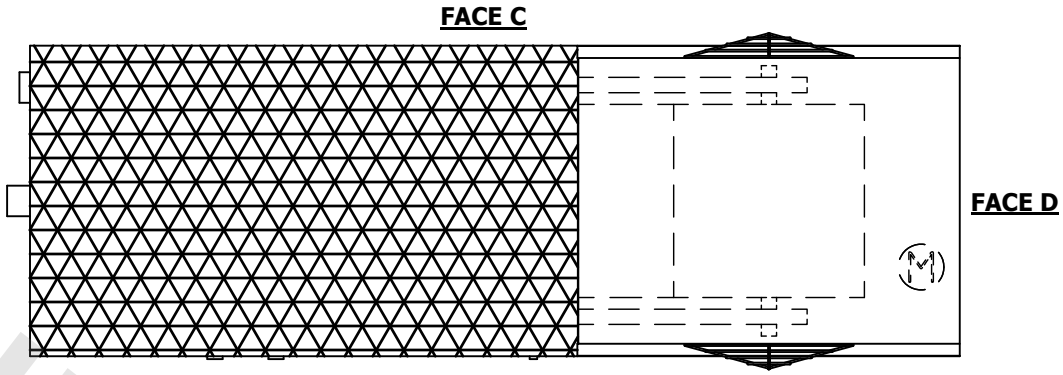

PLAN VIEW

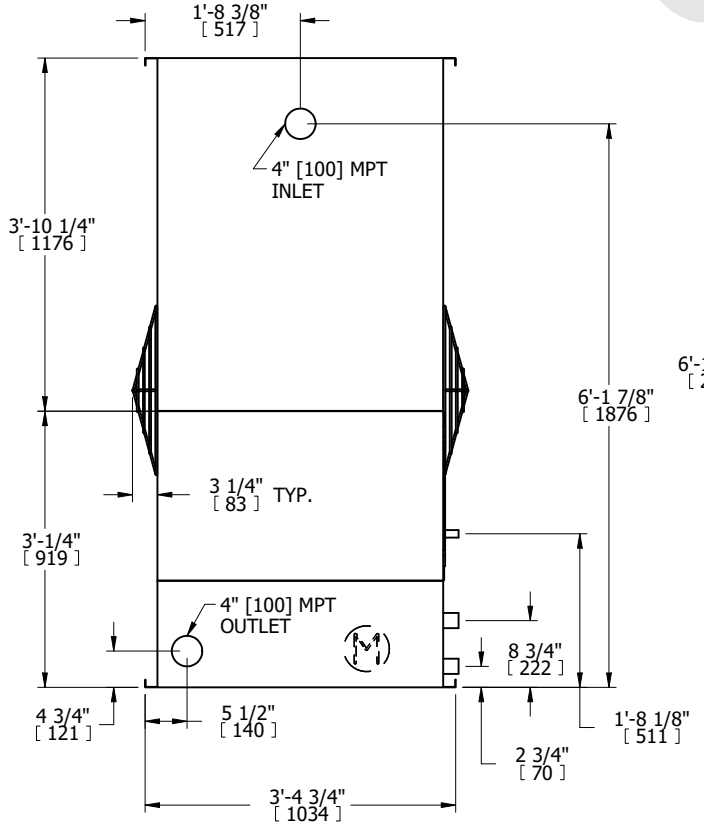

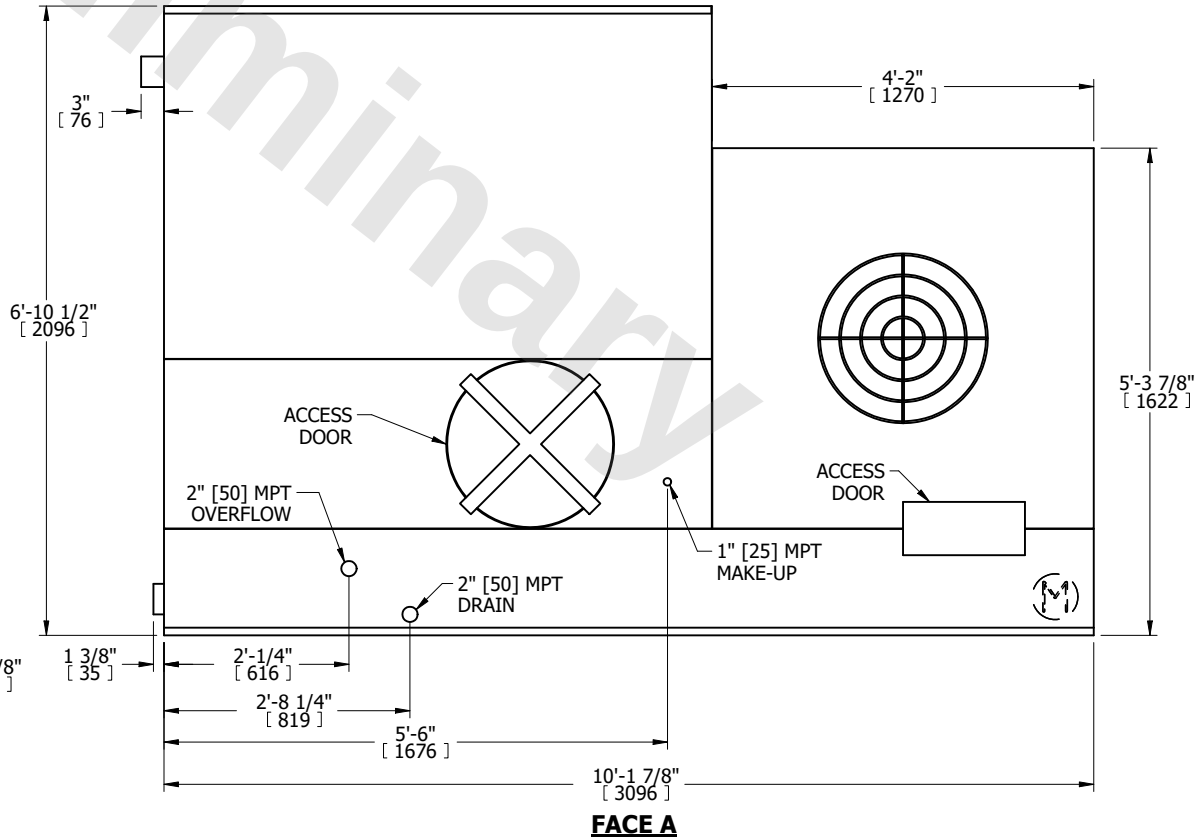

SHIPPING WEIGHT	1510 lbs+ [685] kg+	OPERATING WEIGHT	2490 lbs+ [1130] kg+	HEAVIEST SECTION WEIGHT	1510 lbs+ [685] kg+	NO. OF SHIPPING SECTIONS	1	DRAWN BY:	JLG